Solar Energy: Current Status and Future Prospects

Philip C Eames
Centre for Renewable Energy Systems Technology
Loughborough University

Solar Resource

- Annual solar radiation at the earth's surface is over 10,000 times total primary global energy consumption
- Total global primary energy consumption is less than the solar radiation incident at the earth's surface in 1 hour

Solar radiation

- Low energy intensity, solar constant = 1370Wm^{-2}
- Intermittent nature
- Diurnal/seasonal variation
- Direct and diffuse radiation components

In the following slide the colours in the map show the local solar irradiance averaged over three years from 1991 to 1993 (24 hours a day) taking into account the cloud coverage available from weather satellites.

Solar PV power systems covering the areas defined by the dark disks could provide more than the world's total primary energy demand in 2006 (assuming a solar to electrical conversion efficiency of 8%).

That is, all energy currently consumed, including heat, electricity, fossil fuels, etc., would be produced in the form of electricity by solar cells.

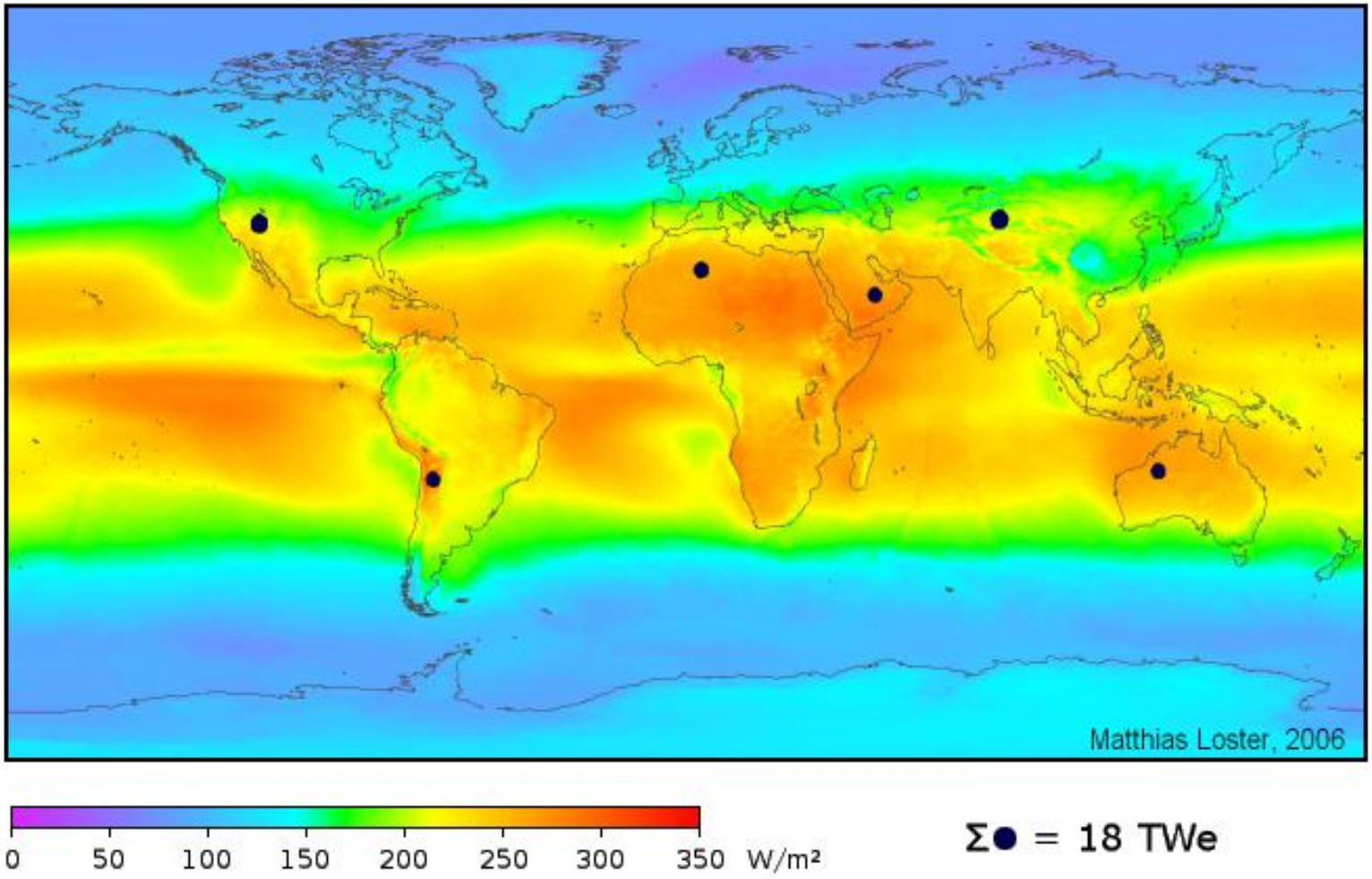
Matthias Loster, 2006
0
50
100
150
200
250
300
350
W/m²
Σ● = 18 TWe

UK Solar Resource

- UK Annual Solar Resource on average 1000kWh/m^2 for a 30º inclined surface facing south
- UK total primary energy consumption in 2007 was 226mtoe or 2803982000MWh
- Approximately 1% of UK land area receives solar energy equivalent to total UK primary energy consumption
- Total UK electricity generated in 2006 was 398,326 GWh. If 3 million homes installed 10m^2 of 20% efficient PV then 1.5% of UK electricity would be generated

Solar Thermal Systems

Solar system selection is country, climate and location specific and can provide depending on the system employed temperatures from ambient to in excess of 3000K or higher.

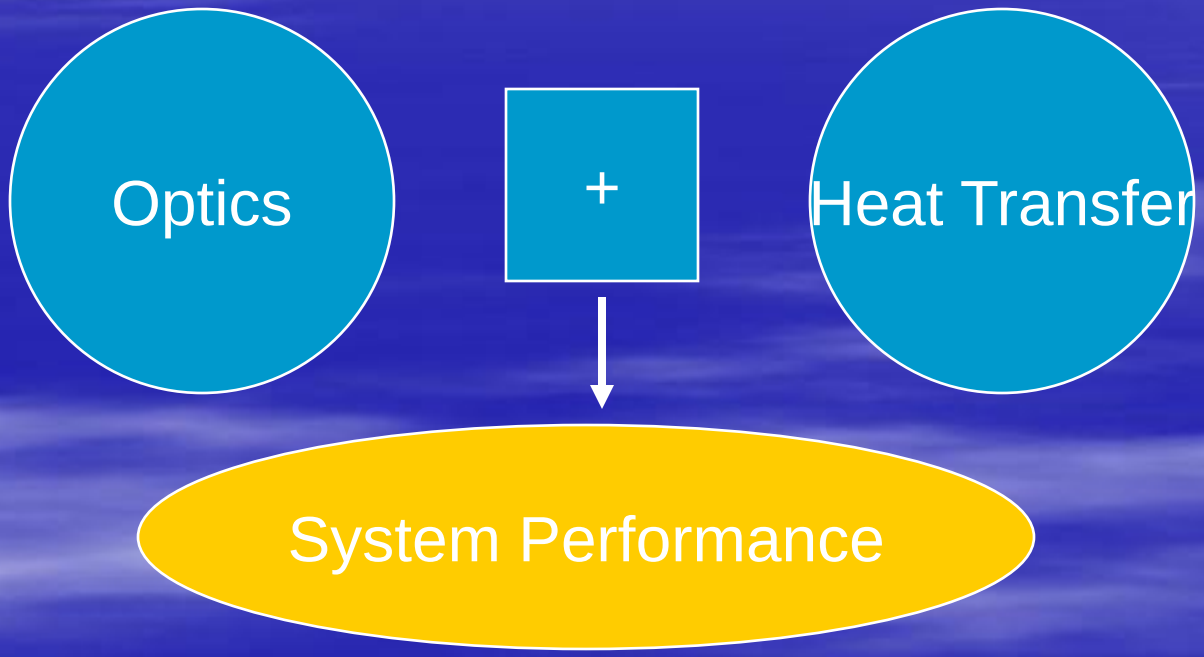

1891 Patent for Solar Water Heater

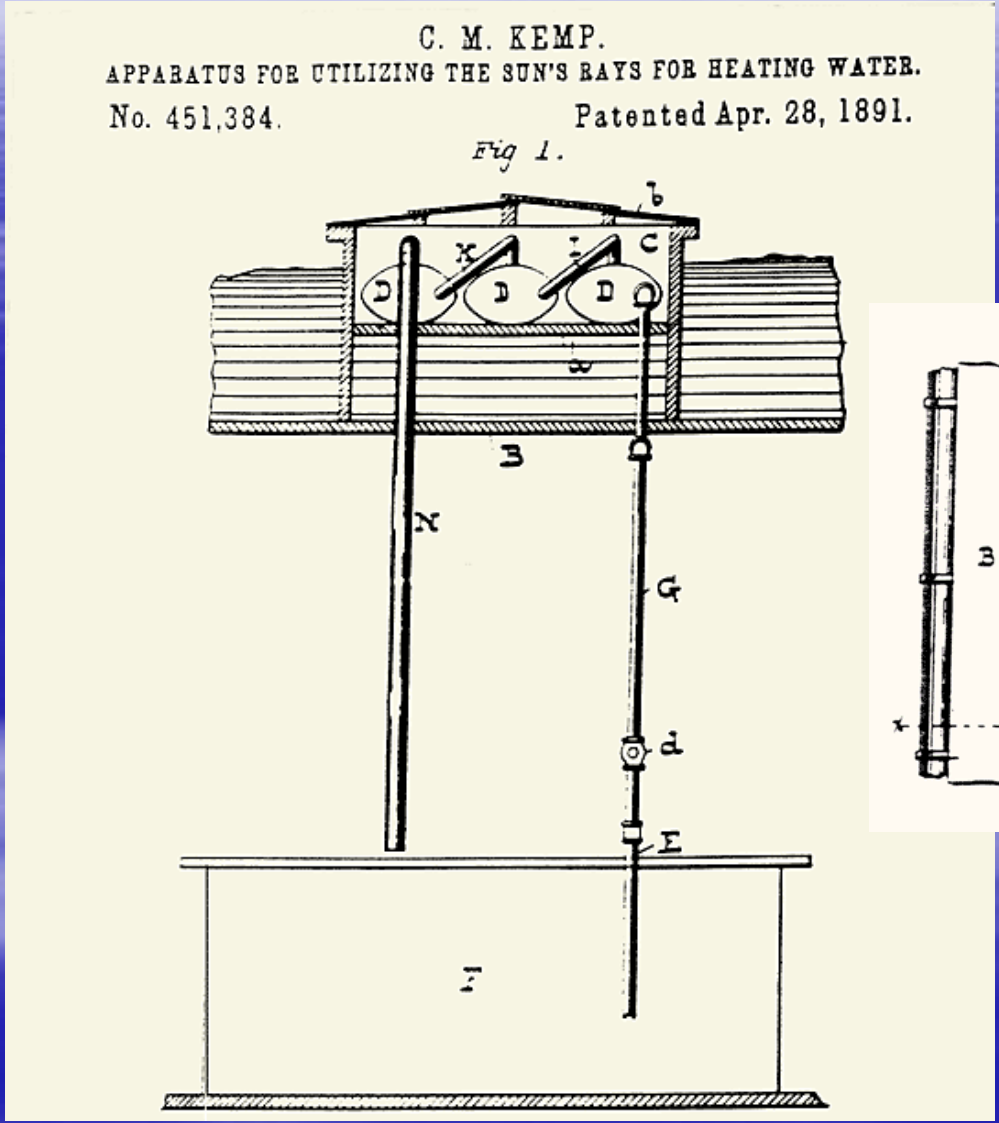

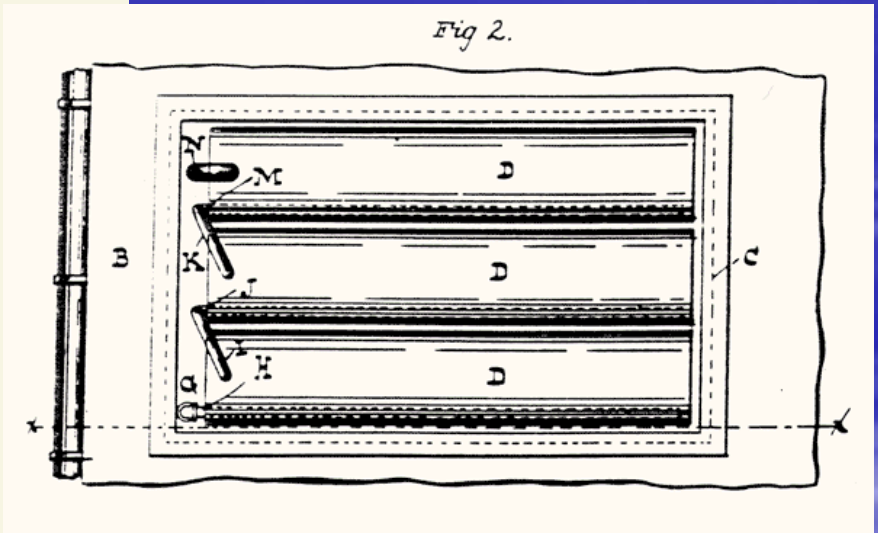

Active Solar Thermal Collectors

- Hot water
- Hot air for space heating
- Process heat / steam
- Solar thermal power

- Solar Concentration, refractive, reflective optics
- stationary, 1,2 axis tracking
- Collector/Absorber Type, (Flat, tubular or point absorber)
- Heat loss reduction, selective surfaces, vacuum envelopes

Active Solar Thermal Energy Collectors

Low temperature heat
Process heat
Solar thermal power

- Non-convecting solar ponds
- Flat plate solar water heaters
- Evacuated tube solar water heaters
- Line axis parabolic and compound-parabolic concentrating collectors
- Parabolic dish reflectors
- Heliostat valleys/fields.

Solar Thermal Power

Large scale grid connected

- Heliostat fields
- Parabolic Trough Systems

Modular small scale

- Stirling engine dish system

Energy storage to provide continuous operation is a major challenge

Photovoltaic Cells

- Photovoltaic (PV) or solar electric cells are solid state devices that convert solar radiation directly into DC electricity.
  - No moving parts.
  - Requires no fuel.
  - Creates virtually no pollutants in operation.

Photovoltaics

- 2.5 GW shipped in 2006
- 90% Mono crystalline, multi crystalline, ribbon or sheet Silicon
- 22% efficiency achieved from commercial lines for mono crystalline cells
- Recent achievements include increased conversion efficiency and reduced material content

Module embodied energy payback now < 3 years

Wafers are being cut thinner, reducing cost while maintaining or increasing conversion efficiency so this figure will decrease further

Thin films aim to reduce cost by using less materials.

- Amorphous, Nano, Micro and Poly-crystalline Silicon thin films, 8-13% efficiency
- $CuInGaSe_2$ (CIGS) 20% efficiency
- CdTe 16.5%

Building Integration

- Power generation on site
- Dual function possible, shading, cladding, control of solar gain
- Ease of retrofit desirable
- Grid connection

Concentrating photovoltaic systems

- Improvements of photovoltaic cell efficiency leads to greater solar to electrical energy conversion and thus a reduction in land area and system size required to achieve a given power output.
- Key to achieving large scale adoption of solar power is the reduction in the cost per Watt peak that a system delivers.
- High efficiency cells are to date only achieved at high cost.
- The use of solar concentration, substituting high cost photovoltaic cells with lower cost optical systems, may lead to practical cost effective systems. However solar tracking is required for high concentrations and diffuse radiation is not collected.

2-axis tracking V-trough

Single axis tracking parabolic trough system

Concentrator cell efficiencies

Mono crystalline silicon 26.8% at 96x

GaAs cell achieved 28% at 1000x

NREL Spectrolab triple junction cell achieved 40.7% efficiency at 360x

Two axis tracking Fresnel lens based concentrator.

- Key engineering issues to be addressed with tracking systems relate to the design and fabrication of the concentrator system in particular the optical, thermal and structural behaviour under likely operating conditions.
- Issues include, design concentration, (2x to >1000x),
- system acceptance half-angle,
- 2 or 3 dimensional concentration,
- primary and secondary concentrator designs,
- reflective and/or refractive optics,

- heat removal,
- misalignment due to initial cell lay-down and or component expansion during operation,
- system tracking requirements and tolerances,
- minimum level of radiation uniformity required across the solar cell ,
- system distortion resulting from wind loading, and
- long term system durability.

- To develop an optimal solar concentrator system in terms of both solar energy conversion efficiency, and life cycle costs requires knowledge of the incident solar radiation characteristics and the design and specification of appropriate components.
- For the UK low concentration systems are desirable since they allow diffuse radiation to be collected
- For medium to high concentration systems, the direct and circumsolar components of radiation only are concentrated.

PV Challenges

- Industry is growing rapidly, 30% per annum.
- $20 Billion dollar a year industry by end of 2008.
- 2.5GW shipped in 2006 is small compared to the growth in new coal plants and very small compared to current installed generating capacity. It will take along time to have a significant impact.
- Concentrating PV systems can increase generating capacity more rapidly.
- Materials shortages have already occurred.
- Some systems use expensive materials that are rare.
- New technologies for example organic PV are yet to achieve high efficiency and durability.
- Due to intermittency of solar radiation there are significant storage issues.
- New technologies for higher efficiencies and low cost.

Solar Thermal Power Challenges

- Improved thermal energy storage is required to overcome intermittency.
- Improved solar/electrical conversion efficiency.
- Reduced total system cost.
- Systems for regions with high diffuse radiation fractions.
- New materials, better selective surfaces, better reflective surfaces.

Global Perspective

- Solar PV and Solar thermal power have large potential to provide clean electricity.
- Systems for solar process heat are also very important and can displace large amounts of fossil fuel use.
- Challenges relate to energy storage, appropriate designs for specific climates, system optimisation, materials, reduced system costs, grid integration.
- Growth rate of PV production must increase beyond current level of 1.3
- Cost must continue to reduce

UK Perspective

Systems for buildings can make a significant contribution

- Technologies required for both new build and retrofit,
- Building integrated PV,
- Solar domestic hot water,
- Solar space heating,
- Improved energy storage,
- Solar cooling to avoid peak summer loads,
- Communal systems to take advantages of economies of size,
- Significant opportunities to develop new improved systems for both domestic use and export,
- Industrial/manufacturing opportunity.

Key Issues

- Government incentives, regulations and feed in tariffs can stimulate the local market.
- If PV was to become the standard cladding for south facing roofs and facades in the UK would the supply and trained installers be available?
- Improved building thermal performance will permit more utilisation of solar space heating.
- Improved solar thermal water heating systems to achieve over 50% annual solar savings fraction.
- High temperature solar systems to drive cooling systems.
- Efficient high density thermal energy storage for space heating.
- Technologies are available and should be implemented now

Research Required to

- To develop new materials and system designs that can achieve higher efficiency at reduced cost
- To develop building integrated systems suitable for new build and retrofit
- To develop low cost non-tracking low concentration systems to utilise direct and diffuse radiation effectively reducing PV materials or achieving higher operational temperatures.
- Improved energy storage
- High efficiency low cost PV systems

Conclusions

- Large scale building integrated PV could provide a significant contribution to UK electricity production.
- Solar thermal systems can play a significant role in displacing fossil fuel use for domestic water heating now and potentially space heating/cooling in the future.
- In climates with higher levels of solar radiation, solar energy systems will become widely used for both heat and electricity generation however energy storage issues must be addressed due to the intermittency of the solar resource.
- Solar energy engineering presents a significant industrial opportunity.